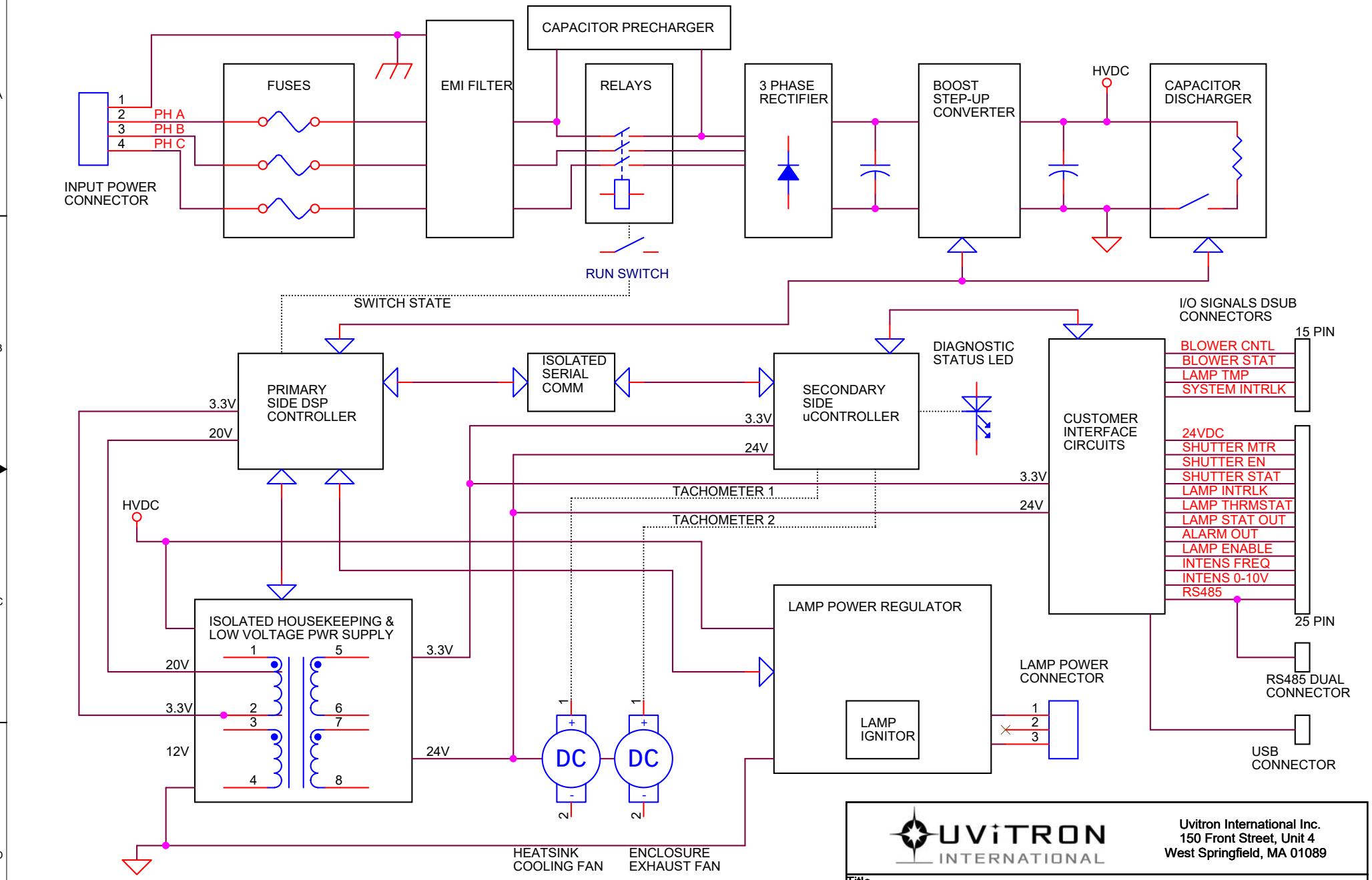

UVITRON INTERNATIONAL

Uvitron International Inc.
150 Front Street, Unit 4
West Springfield, MA 01089

Title	HIWATT 2 BALLAST SYSTEM BLOCK DIAGRAM	
Size A	Document Number UV4037	Rev A
Date: Wednesday, August 15, 2018	Sheet 1 of 1	